BRUKER

EVOQ™

Triple Quadrupole Mass Spectrometer

MASS SPECTROMETRY

Innovation with Integrity

“A GAME CHANGER CREATES SUCH A DISRUPTIVE ADVANTAGE, IT TRANSFORMS THE ACCEPTED RULES”

The EVOQ triple quadrupole for liquid chromatography (LC-TQ) was designed for a singular purpose—to reliably quantify thousands of real samples in the fastest sample-to-report time possible. It delivers exceptional sensitivity, precision, accuracy, linearity, and a wide dynamic range for your multiple reaction monitoring (MRM) assays. Innovations in software and atmospheric pressure ionization (API) technology make it a game changer for routine high-sensitivity, quantitative analysis in food, environmental, pharmacokinetics, forensic toxicology, and research markets.

Key Benefits

Easily obtain ultra-high sensitivity for small molecules and biomolecules as a result of the innovative interlaced-quadrupole (IQ) dual ion funnel.

Confidently run matrix-rich samples on the robust orifice-plate based API interface.

Efficiently analyze thermally labile molecules at high flow rates with the novel vacuum insulated probe (VIP) heated-electrospray probe.

Save time using exception-based data-review software, which makes it easier to highlight chromatograms that do not meet preset method criteria.

Key Applications

Food testing requires fast results because of the perishable nature of food. The **EVOQ LC-TQ** delivers the fastest sample-to-report time using **PACER™** software.

Environmental analysis can be made cost-effective by using on-line extraction (OLE) using the space-saving **Advance™** UHPLC with OLE.

Forensic Toxicology covers a wide range of compounds in difficult matrices, which can be easily ionized by VIP heated-ESI technology.

Pharmacokinetics in early drug discovery requires high-sensitivity and exceptional robustness to analyze hundreds of rat plasma samples on a daily basis; a task easily achieved by the orifice/IQ dual ion funnel design.

Bruker Liquid Chromatography Solutions

The Advance UHPLC, HPLC, and OLE LC modules

By engineering the lowest possible system delay-volume, the **Advance** LC pump technology delivers superior ballistic gradient reproducibility at analytical flow rates. This design-for-purpose detail minimizes gradient delay and ensures highly precise retention times. The benefit is shorter run-to-run cycle times with the reproducibility required for quantitative LC-MS/MS analyses.

The OLE module extends the LC-TQ performance by enabling method-driven, on-line cleanup or sample pre-concentration. The addition of a third pump in the same module and under full software control reduces bench space requirement and simplifies setup, while giving you the flexibility of rapid method development.

1. Highly efficient VIP heated electrospray and APCI probes standard
2. Superior MRM sensitivity lens-free mass analyzer
3. Flat-tuning, tune-free, IQ dual ion funnel
4. Available in high performance **Qube™** or ultra performance **Elite™** models
5. UHPLC, HPLC, or OLE models with built-in column oven and degasser
6. eVol™ digital syringe standard infusion or loop injection experiments
7. CTC Autosampler (industry workhorse) with reduced carryover capability
8. High-capacity, cooled-tray sample storage standard

“PRECISON, ACCURACY, SPEED, LINEARITY, DYNAMIC RANGE”

Sensitivity & Robustness

Your assay demands both because real samples have more matrix than analyte. The EVOQ API interface was engineered to deliver sensitivity with uncompromised robustness; requirements that set the standards for accuracy, precision, and reproducibility.

Duty cycle impacts sensitivity, accuracy, and precision, and is defined as the time spent by the mass analyzer measuring the target analyte. In MRM, the duty cycle can be close to 100% for a single component. Even with a co-eluting internal standard, the duty cycle of a TQ-MS is much higher than any other MS analyzer technique that requires scanning of the mass range. This is the main reason a TQ-MS remains unbeatable for high sensitivity, absolute quantitative analysis.

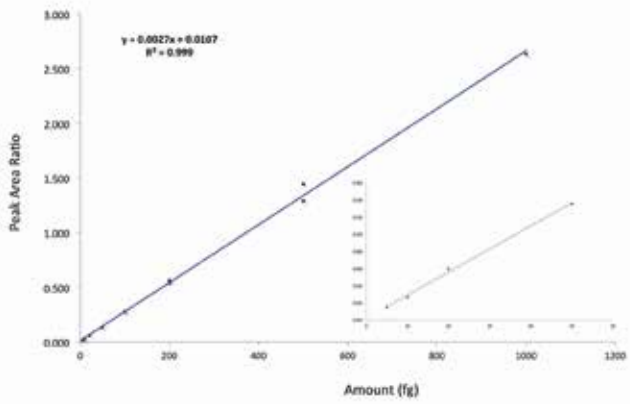

Calibration curve between the range 5 fg-1000 fg of alprazolam injected on column.

Accuracy & Precision

Accuracy is the measure of the closeness of the experimental value to the actual amount of the target analyte in matrix. It is a measure of systematic bias. Precision is how well the experimental values agree with each other and is a measure of random error.

Together, these parameters measure the total error of the assay, which in turn determines the limit of quantitation (LOQ). Since the MRM technique spends nearly all the time measuring the target analyte, the result is an unbeatable LOQ in matrix; something you will routinely achieve on the **EVOQ LC-TQ**.

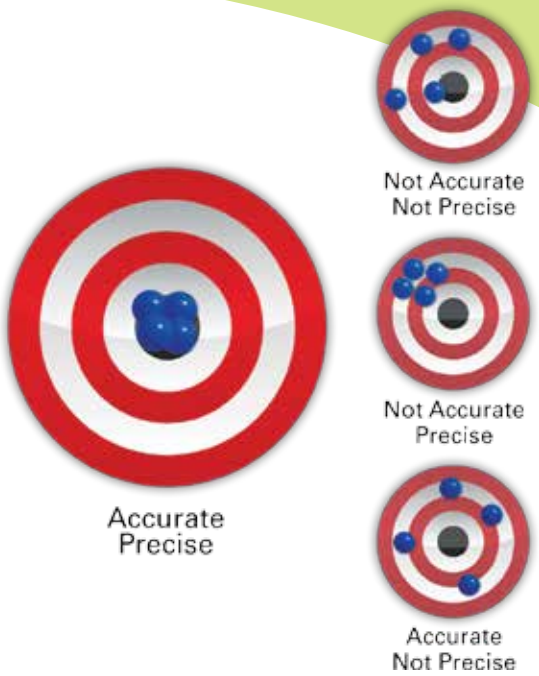

Delivering Heat Where It Belongs

Simply set the nebulizer temperature and let VIP technology take over the responsibility of ensuring precise heated the electrospray ionization (ESI) for maximum sensitivity. VIP, a patent-pending heated ESI design that efficiently ionizes thermally labile molecules such as N-oxides, glucuronides, or peptides during the high flow rate heated ESI process. This innovative technology provides an insulated flow path for the LC eluent shielding it from undesirable temperature fluctuations occurring during the LC gradient.

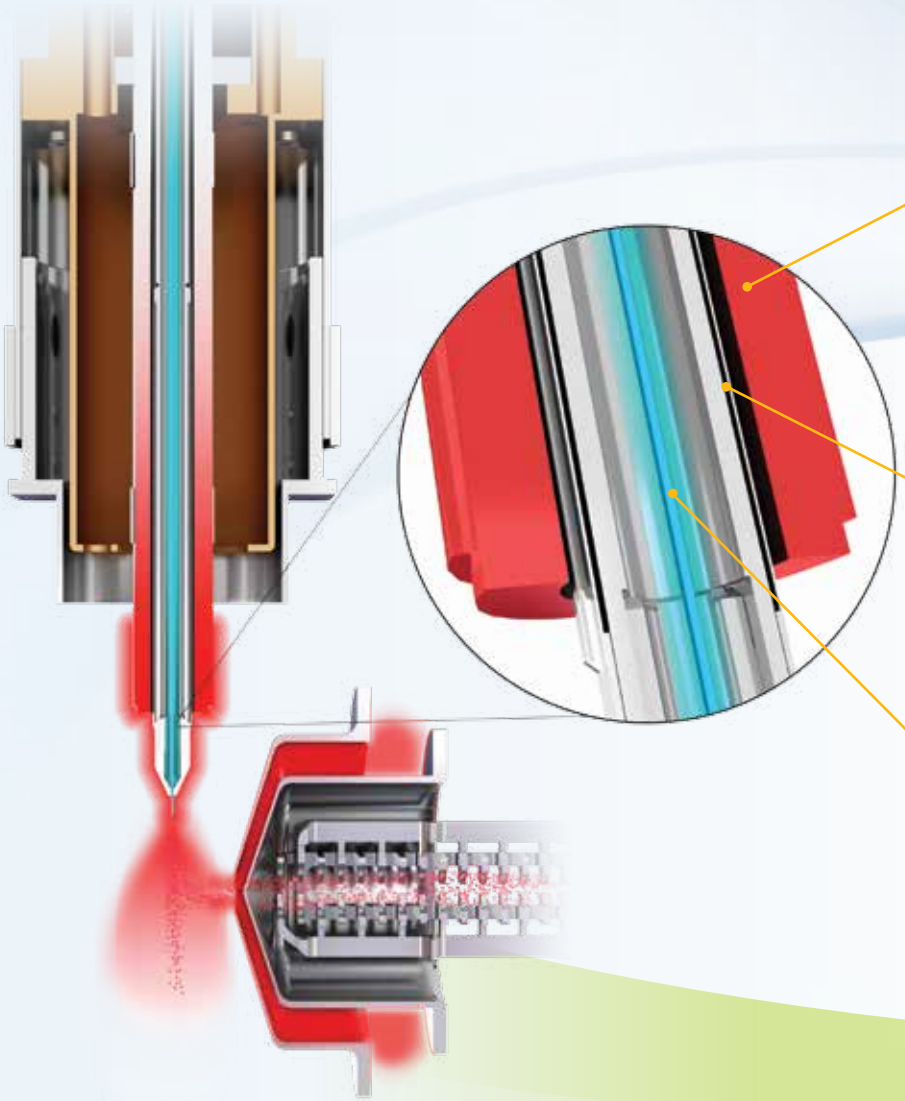

High-efficiency ceramic heater technology, with configured thermal profiling, delivers highest heat near the probe tip.

Shape vacuum™ insulation protects the LC eluent from boiling before nebulization.

Fluid path remains cool before nebulization, which is essential for protecting thermally fragile compounds.

“THE SCIENCE OF SENSITIVITY”

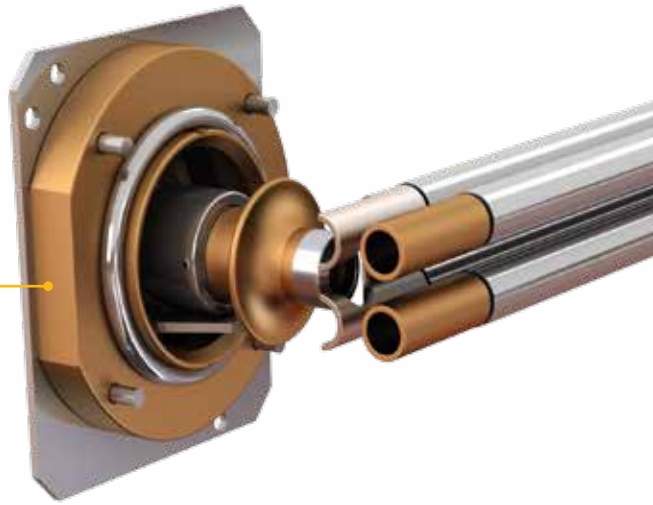

Detector

This innovative detector design (US Patent 7855361) eliminates the need for a conversion dynode which allows for highly sensitive negative ion detection and fast switching capability.

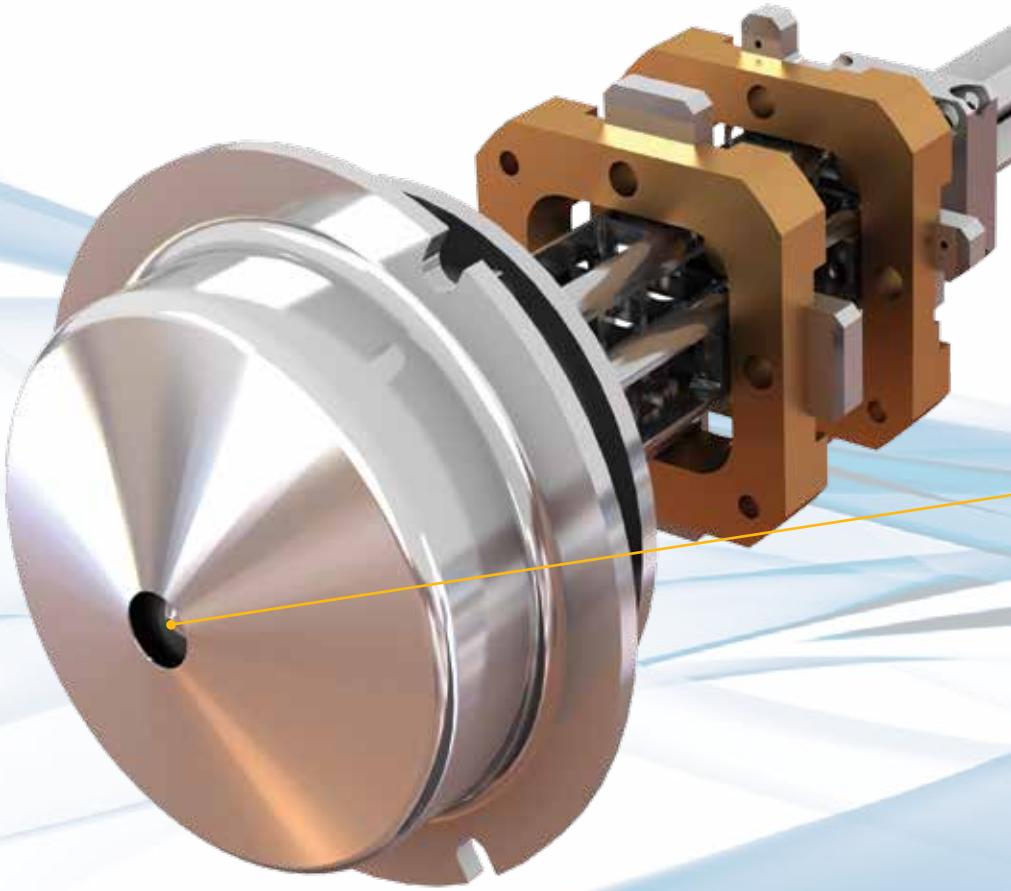

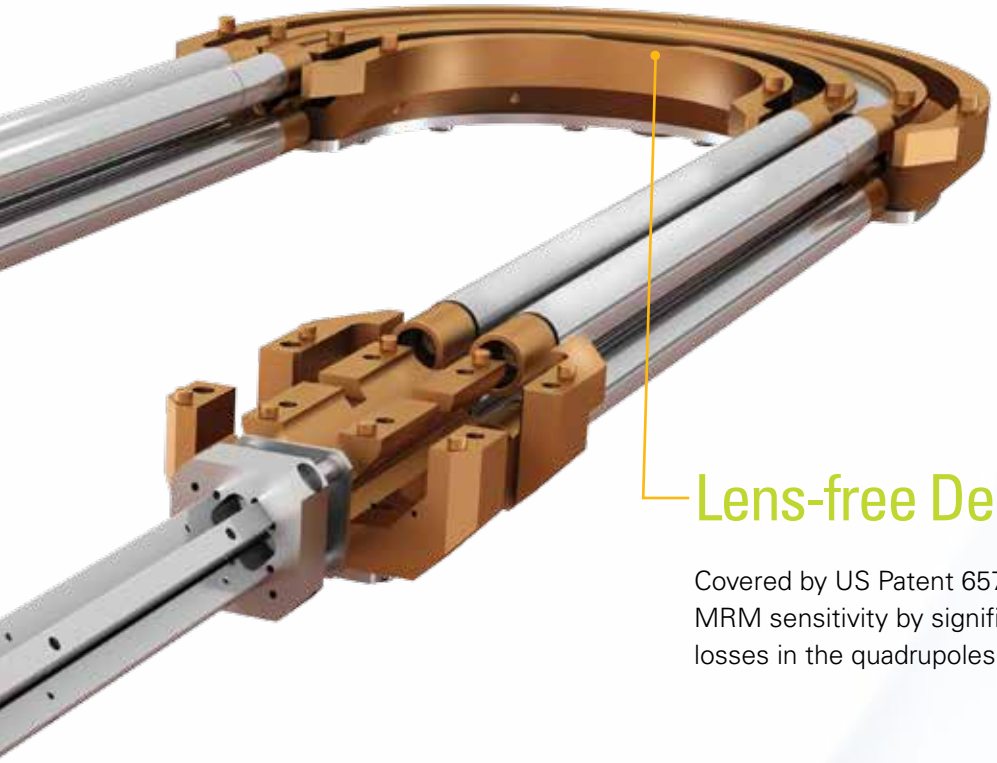

Lens-free Design

Covered by US Patent 6576897, this unique feature improves MRM sensitivity by significantly reducing ion scattering losses in the quadrupoles before and after the collision cell.

Orifice Interface

The EVOQ was designed to be highly sensitive, robust, and simple to operate with low maintenance requirements. The orifice design ensures that the ions traverse the opening into the vacuum chamber and come under the influence of the IQ dual ion funnel system in the fastest time possible. A hot counter-current drying gas (cone gas) guards against stray droplets entering the vacuum chamber. The vital requirement for high-sensitivity is simply to minimize the time spent going from the spray chamber into the IQ dual ion funnel in the first vacuum region. The orifice design delivers this simple requirement most effectively.

Tune-free Ion Optics

An elegantly simple design that captures ions in the free-jet expansion region and efficiently focuses them into a coherent ion beam to deliver high sensitivity and robustness without the need for compound-specific tuning.

The IQ dual ion funnel system produces two key benefits:

1. Ease-of-use, due to the funnel-shaped, RF-only focusing field design which concentrates the ions into a coherent ion beam, eliminating the need for compound-dependent tuning.

2. Dramatically improves instrument up-time and eliminates the need for frequent maintenance due to the spatial geometry of the IQ dual ion funnel which improves removal of background gases over traditional stacked-lens funnels, reducing surface contamination.

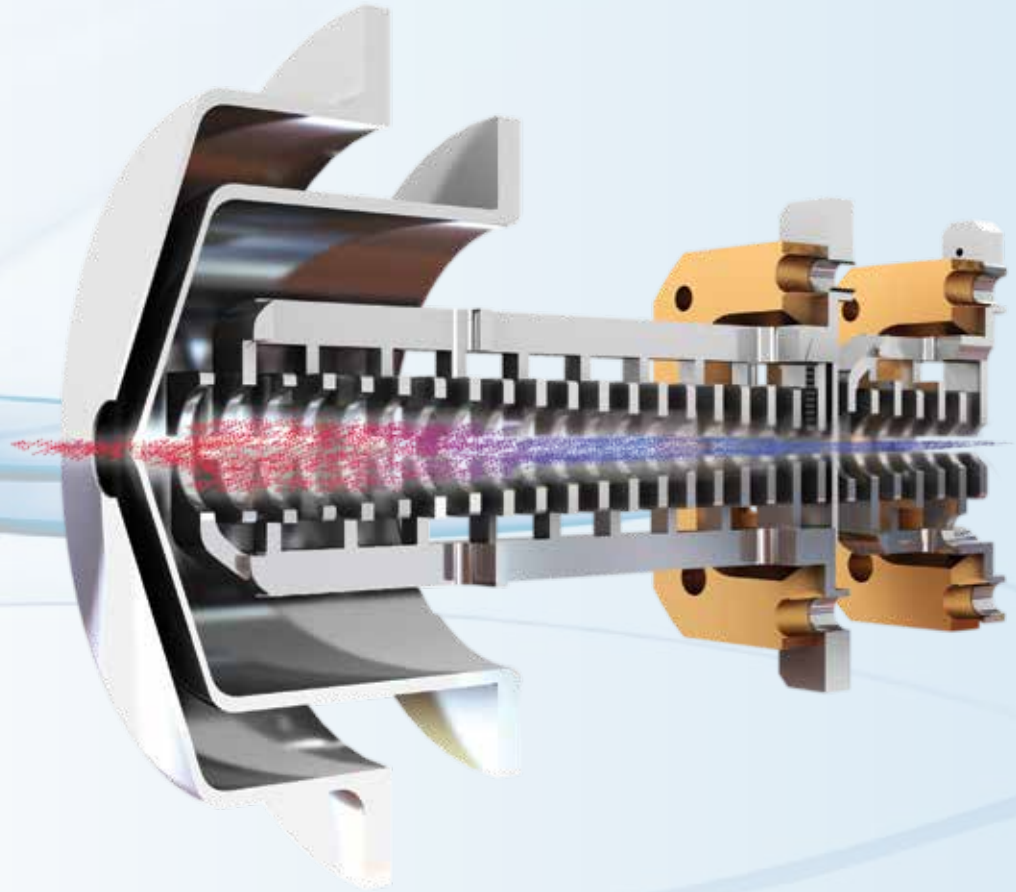

BRUKER

“PERFORMANCE-DRIVEN SOFTWARE”

Are You Drowning in Data?

For years your vendor kept delivering hardware that promised to run more samples per day, using automated sample preparation and ballistic gradients. Yet, your productivity did not increase. Why? They forgot that the vital process of data analysis and review was still dependent on redundant levels of human interaction to ensure data quality. They simply shifted the bottleneck – they failed to satisfy your need for increased efficiency. Hardware is only half the solution and their solution left you drowning in data.

Imagine an innovation in software that makes the human interaction with the process of data review more efficient by eliminating your data review bottleneck. How? By employing exception-based data review to instantly highlight integrated peaks that fail to meet the preset method criteria, the analyst can now focus on the problem areas. This Bruker software innovation instantly increases efficiency by eliminating unproductive time spent on data review without compromising data quality.

Bottlenecks eliminated from sample-to-report. Now that’s a **game changer**!

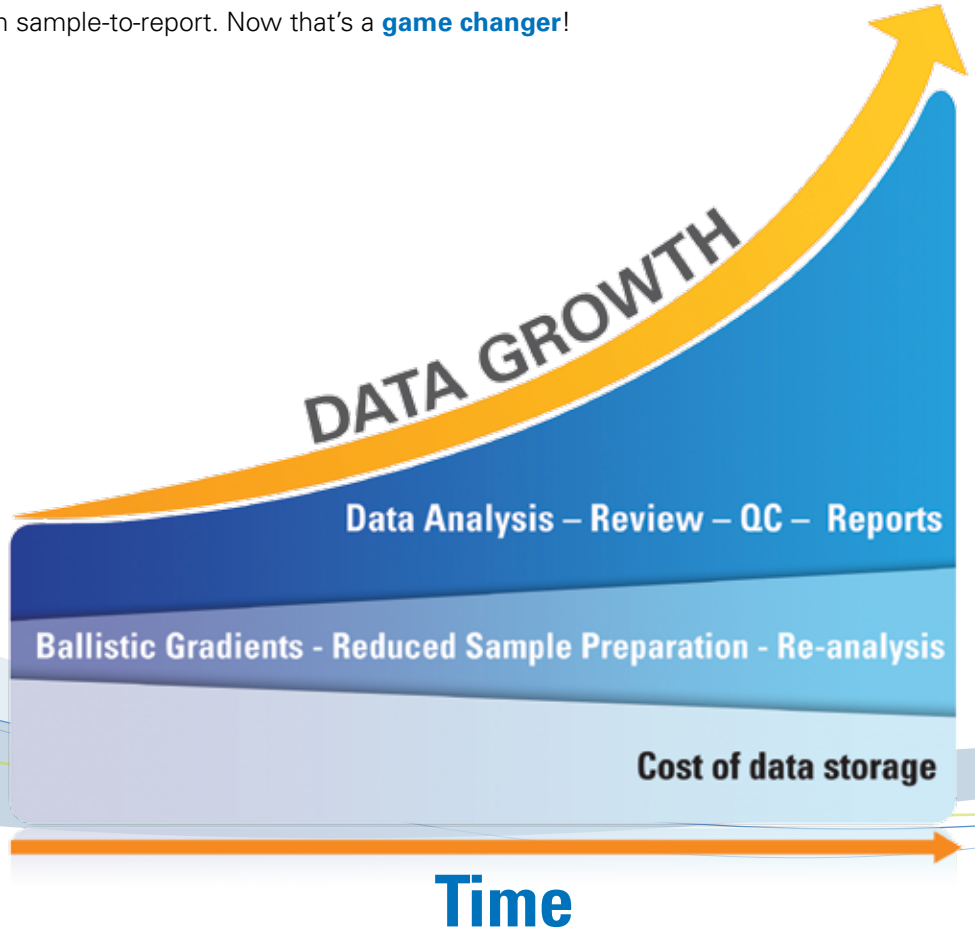

“ PACER SOFTWARE ”

Exception-based Data Review

The powerful **PACER** integration algorithms use pattern-recognition technology to accurately define and integrate small peaks within noisy baselines, a challenge that increases as you approach the LOQ. By accurately picking peaks on the large majority of components, the human workload for review and manual integration is dramatically reduced. This is important because the highlighted chromatograms are the ones that influence assay quality and your reputation.

In a commercial testing laboratory, we understand time is critical and data quality is paramount. **PACER** software and the **EVOQ LC-TQ** enable you to run more samples without the typical data analysis bottlenecks. Even better, you put a smile on the face of your QC reviewer. Now that’s a **game changer**!

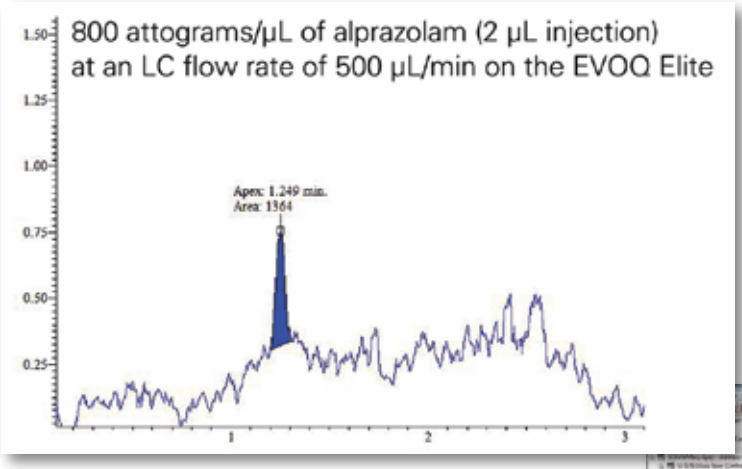

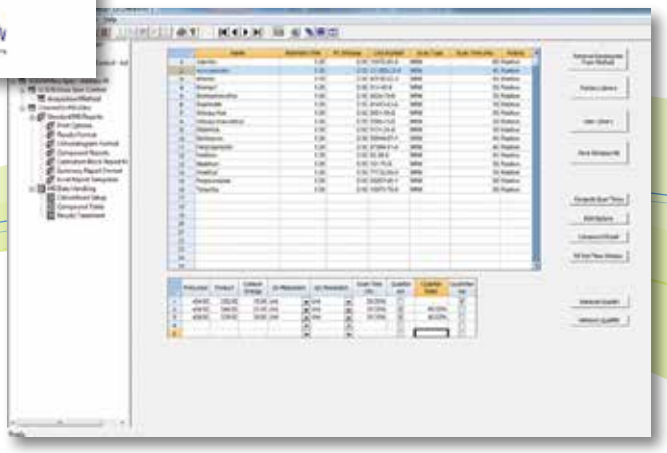

“CHALLENGE THE STATUS QUO”

Demand a better solution for LC-MRM quantitative analysis - experience the Bruker EVOQ LC-TQ solution.

For over 50 years Bruker has embodied innovation with integrity as demonstrated by its development of world-class scientific instruments. Today we are pioneering the migration of technology from research to the commercial laboratory. The **EVOQ Elite** and the **EVOQ Qube** reflect this design philosophy and solve the hardware and software challenges faced by the quantitative analysis community.

Experience the game changing performance of the **EVOQ LC-TQ**; experience the innovation from Bruker.

For research use only. Not for use in diagnostic procedures.

BRUKER

www.bruker.com